A1

This drawing and/or any technical information relating to it issued in strict confidence and may not be reproduced or used for manufacture without written permission. Upon receipt of which it is the users responsibility to seek confirmation of any dimensions and production tolerances.

ENGRAVING DETAILS

ALL CHARACTERS TO BE RAISED 0.30 AND 0.50 WIDE
LETTERS TO BE 4.5 HIGH
NUMBERS TO BE 3.0 HIGH

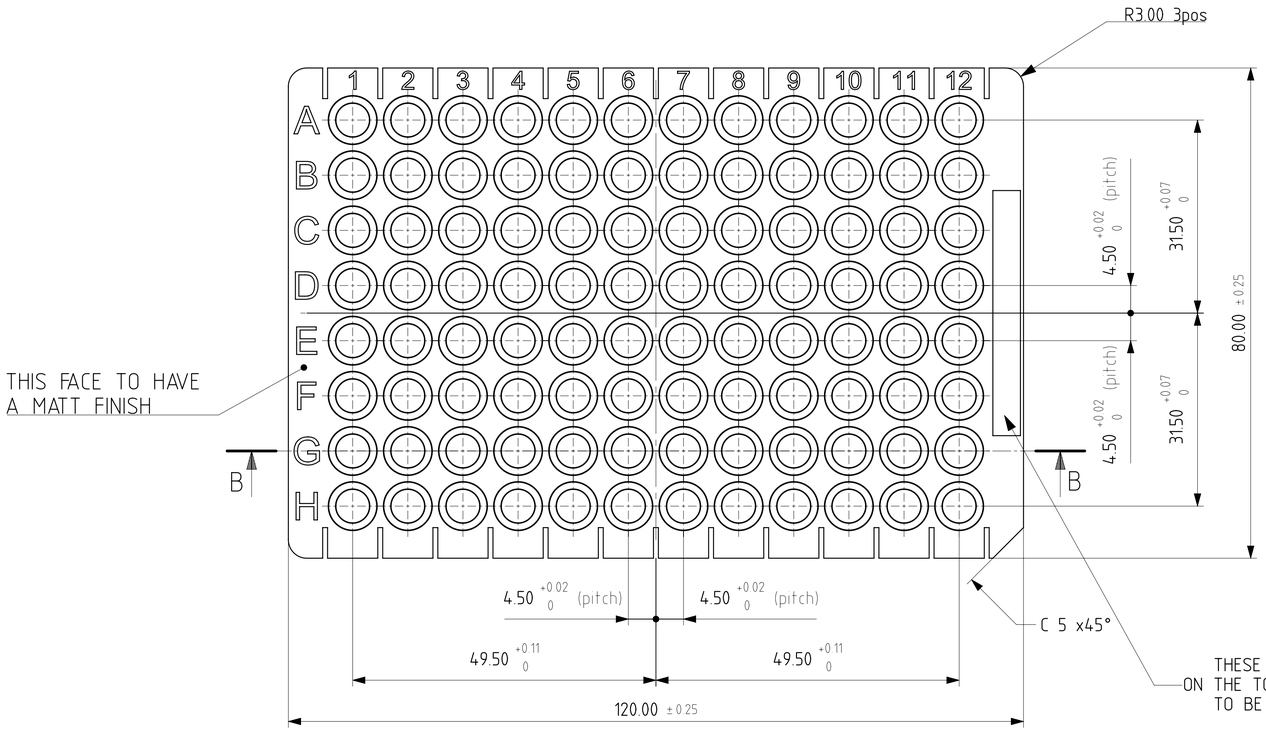

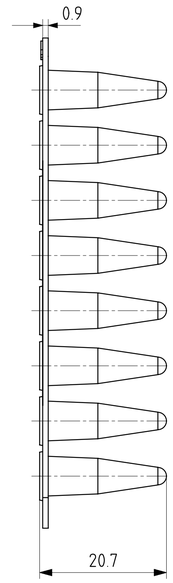

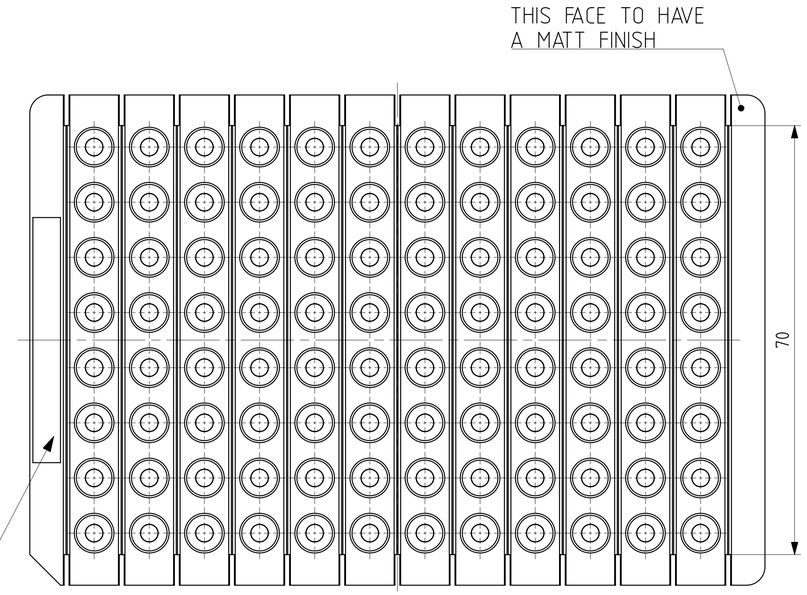

THESE AREAS TO BE INSERTED
ON THE TOOL ALLOW CUSTOMERS NAME
TO BE ENGRAVED IF REQUIRED

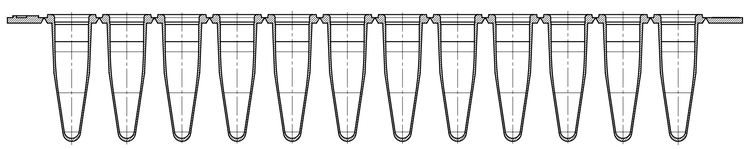

SECTION B-B

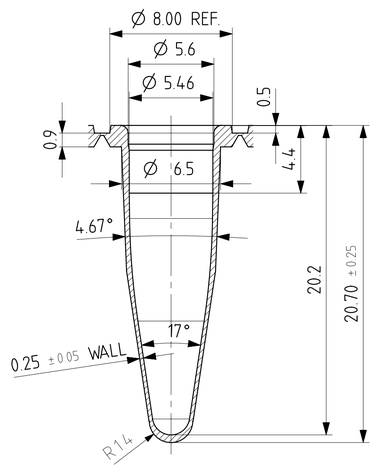

DETAIL C
SCALE 5:1

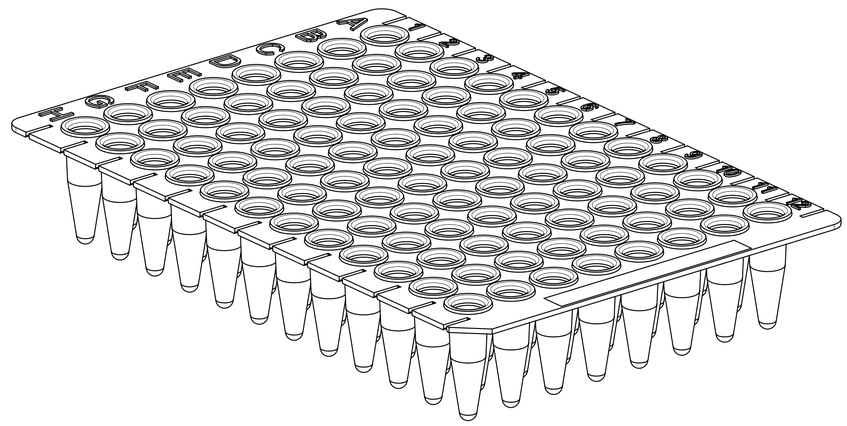

NOTE:

ALL FACES TO BE HAVE A SMOOTH GLOSS FINISH (HIGHLY POLISHED ON TOOL)
UNLESS OTHERWISE STATED

ISSUE	DATE	AMENDMENT
A	16.06.2016	New drawing was prepared

4titude®
WWW.4ti.co.uk

DO NOT SCALE
IF IN DOUBT ASK

CUSTOMER:
CUSTOMER DRG. No.: ISSUE:
MATERIAL: POLYPROPYLENE Purell HP371P
TOLERANCES: GENERAL TOLERANCES (UNLESS OTHERWISE STATED) 0 ±0.15; 0.0 ±0.1; 0.00 ±0.05; ANGULAR ±0°30' (ALL DIMENSIONS IN MILLIMETRES)

DRAWN: ZE.
DATE: 16.06.2016
CHECKED: JB.
DATE:
SCALE:

TITLE: Tear-A-Way™ 96 Well PCR Plates
DRAWING No.: 4ti-0750/TA (MARKETING)
SHEET No.: 1 OF 1
ISSUE: A