This drawing and/or any technical information relating to it issued in strict confidence and may not be reproduced or used for manufacture without written permission Upon receipt of which it is the users responsibility to seek confirmation of any dimensions and production tolerances

A0

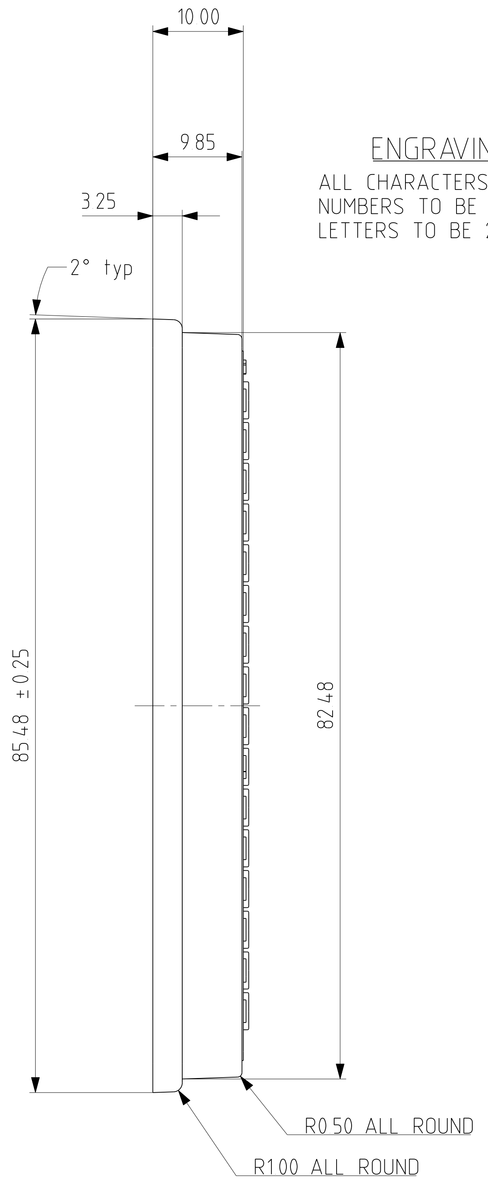

ENGRAVING DETAILS

ALL CHARACTERS TO BE RAISED 0 30
NUMBERS TO BE 1 5 HIGH
LETTERS TO BE 2 5 HIGH

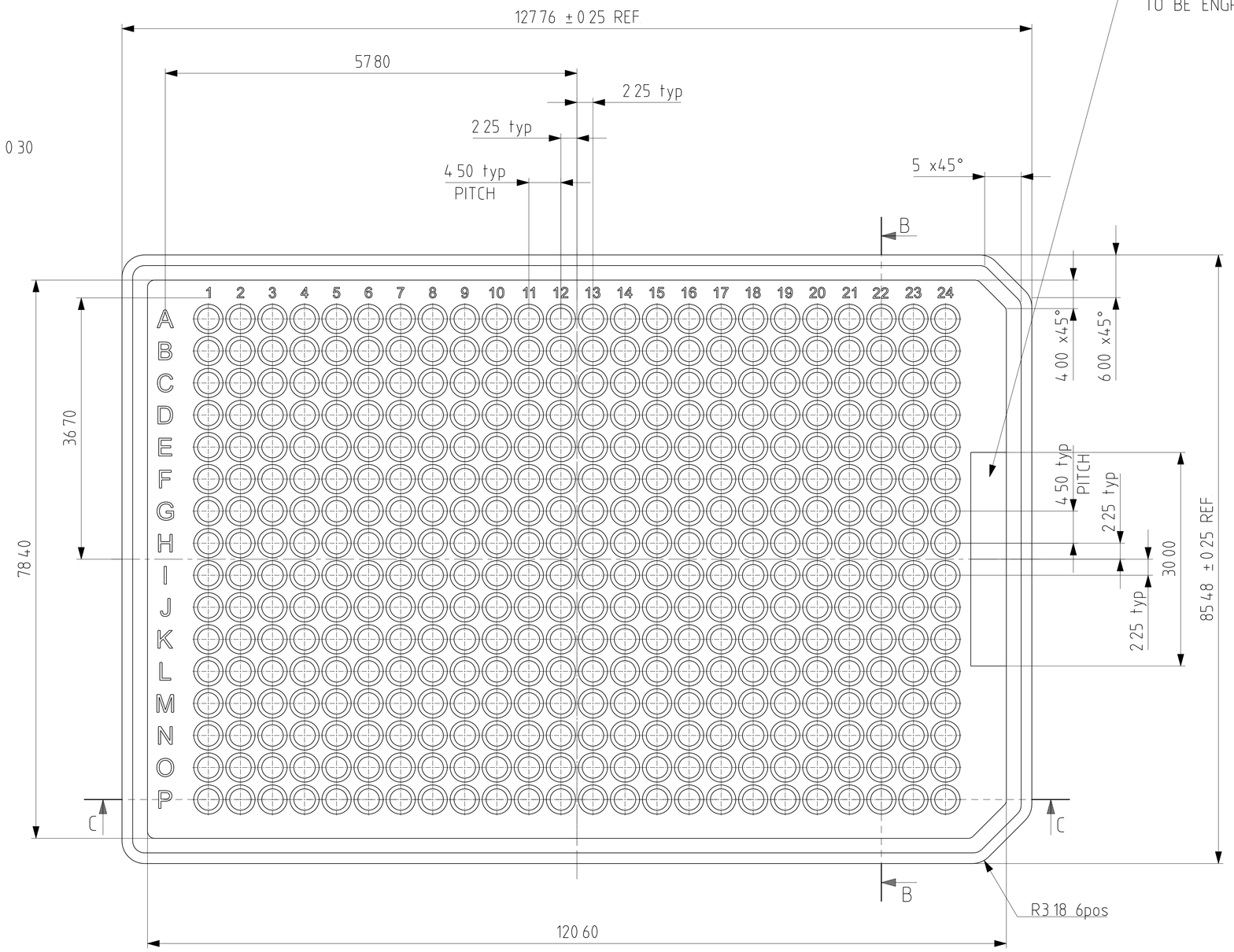

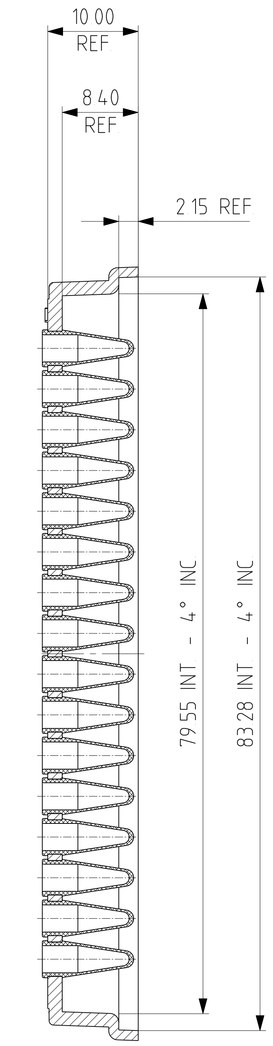

SECTION B-B

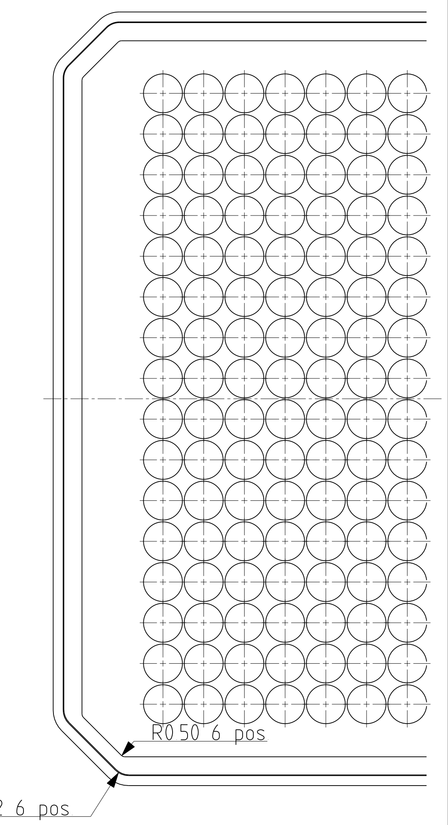

PART VIEW ON ARROW "A"

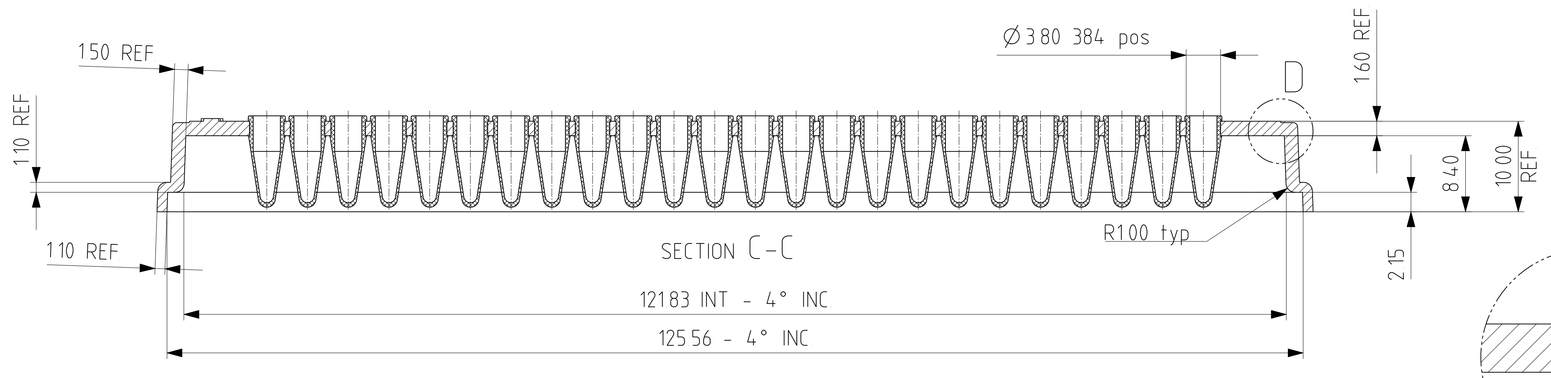

SECTION C-C

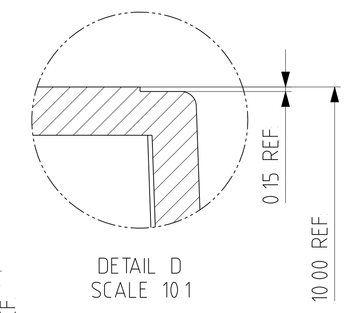

DETAIL D
SCALE 10 1

NOTE

1. SURFACE FINISH TO BE SMOOTH HIGH GLOSS - POLISHED ON TOOL
2. SIDE WALL BOWING ALLOWED INWARDS ONLY UP TO A MAXIMUM 0 25

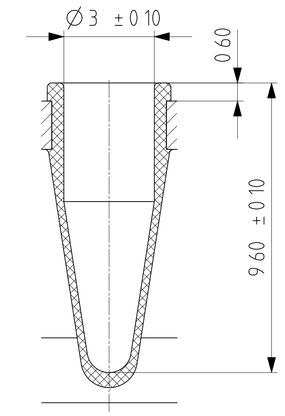

VIAL FORM 384 pos
SCALE 10 1

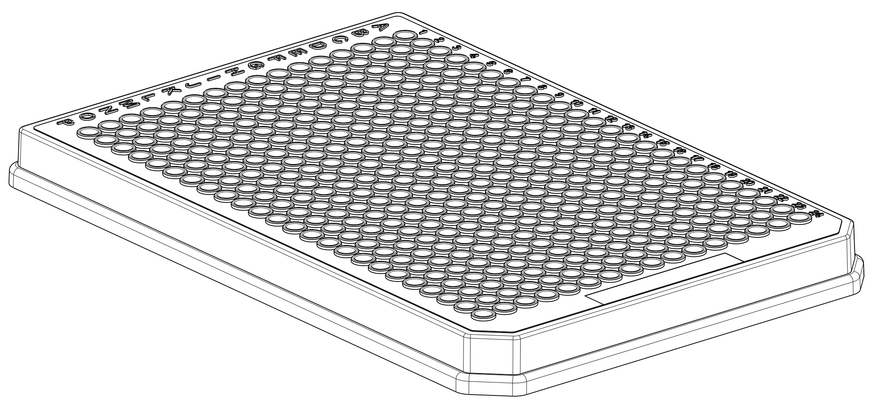

M 2 1

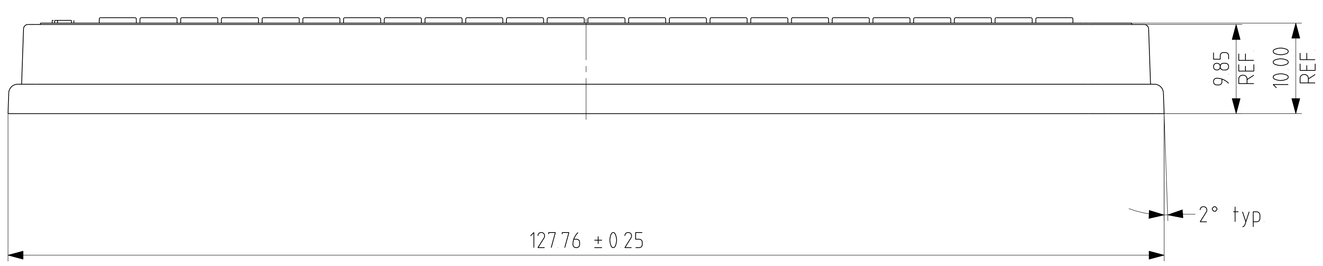

Code	Description	Plates/Case
4ti-0380/C	FrameStar® 480, 384well PCR plate, clear wells, clear frame	50
4ti-0381	FrameStar® 480, 384well PCR plate, white wells, clear frame	50
4ti-0382	=4ti-0381 + 50 qPCR adhesive seals (4ti-0560)	50
4ti-0383	=4ti-0380/C + 50 qPCR adhesive seals (4ti-0560)	50

ISSUE	DATE	AMENDMENT
B	24 11 2011	Frame's cut corner by the updated version The 40C-D1 drawing as issue B Frame drawing's date 02 02 2011

4titude®
www.4ti.co.uk

DO NOT SCALE
IF IN DOUBT ASK

CUSTOMER
CUSTOMER DRG No | ISSUE
MATERIAL
TOLERANCES
GENERAL TOLERANCES (UNLESS OTHERWISE STATED) 0 ± 0 25, 0 0 ± 0 20, 0 00 ± 0 10, ANGULAR ± 0° 30' (ALL DIMENSIONS IN MILLIMETRES)

DRAWN ZOLTAN E
DATE 24 11 2011
CHECKED PETER C
DATE
SCALE

TITLE FrameStar 480/384 for Roche LightCycler 480
DRAWING No 4ti-0380
SHEET No 1 OF 1
ISSUE B