CAT. NO.....:	295-3345		295-4545	
PORE SIZE (um).....:	0.45		0.45	
UPPER CAP. (mL)....:	500		500	
BOTTLE NECK SIZE...:	33mm		45mm	
MEMBRANE COLOR.....:	WHITE		WHITE	
MEMBRANE DIA (mm)..:	75		75	
	INCHES	MM	INCHES	MM
A (UPPER I.D.).....:	3.8	96	3.8	96
B HEIGHT.....:	5.0	127	5.1	130
C DIA (BASE).....:	1.4	36	1.9	48
D DIM.....:	2.5	64	3.0	76
NOM. WT. (gms).....:	70		72	

MATERIALS	
UPPER CONTAINER	PS
COVER	PS
COLLAR	BLUE PS
ADAPTOR	WHITE LDPE
GASKET	FOAMED LDPE
MEMBRANE	PES
VENT PLUG	CA

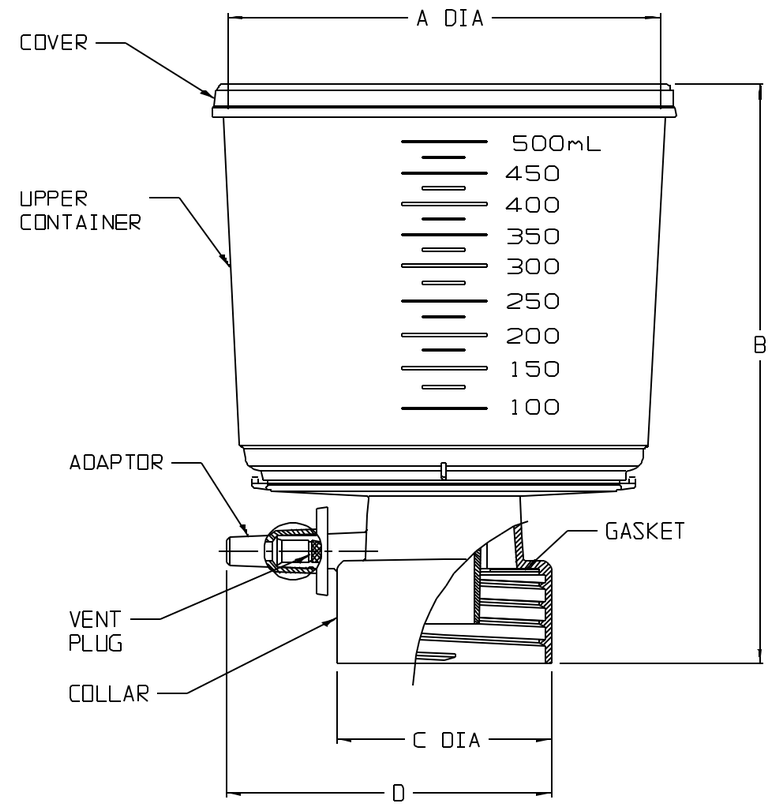

SPECS ON BACK

NOT TO SCALE

NOTES:

1. ALL DIMENSIONS ARE NOMINAL AND IN INCHES AND MILLIMETERS UNLESS OTHERWISE NOTED.
2. THIS IS NOT A PRODUCTION DRAWING, BUT IS FOR INFORMATIONAL PURPOSES ONLY, AND IS SUBJECT TO CHANGE WITHOUT NOTICE.

CONFIDENTIAL

THIS PRODUCT SPECIFICATION SHEET CONTAINS CONFIDENTIAL AND/OR PROPRIETORY INFORMATION AND IS TO BE USED ONLY FOR THE EXPRESSED PURPOSES AGREED UPON BY AN AUTHORIZED OFFICER OF THERMO FISHER SCIENTIFIC.

ThermoFisher SCIENTIFIC

Thermo Fisher Scientific
75 Panorama Creek Drive
Rochester, NY 14625-2385, USA

MADE	APP'D		REV.
MC²	PVC 12/22/05	PSS 00-0295-XX45	1205
CK'D SH			

DESCRIPTION:

BOTTLE TOP FILTERS